$2.00

OPTOELECTRONICS, inc.

Digital Capacitance Meter

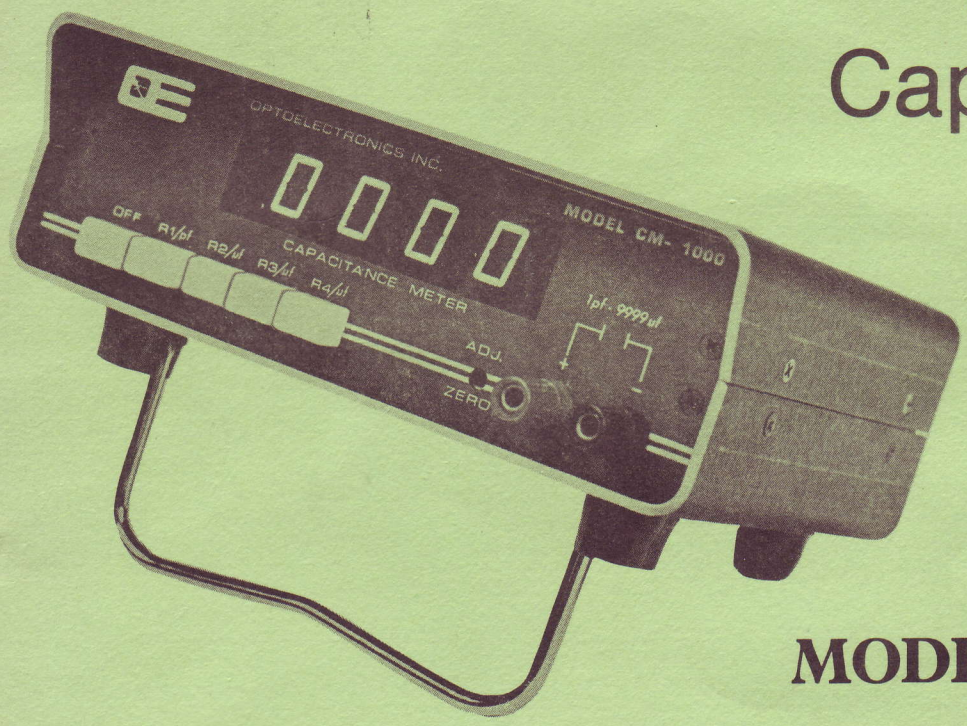

MODEL CM-1000

- Measures capacitance from 1 pf to 9999 uf in four ranges.
- Readings displayed on four large .6" LED digits.
- Excellent design and finest components for an accuracy of ±0.1% of range less one digit.
- Automatic decimal placement.
- Heavy-duty black anodized case with tilt-up bail/handle.
- Push button controls for on/off and range selection.
- Sized 3"H by 7½"W by 6½"D.
- FULL ONE-YEAR WARRANTY ON FACTORY WIRED AND TESTED UNITS.

CM-1000K complete kit	**$129.95**
CM-1000WT factory wired and tested	**$179.95**

CAPACITOR VALUES FROM 1 PF TO 9,999 μF are easily measured using the *model CM-1000* Digital Capacitance Meter. This wide measurement range is achieved using a carefully designed capacitance measuring circuit. A quartz-crystal timebase, 1% film resistors, and a precision SE555 integrated circuit timer (SE instead of NE prefix indicates premium part) yield 1%, ± 1 count accuracy. Four jumbo LED digits and four pushbutton ranges with automatic decimal point placement make capacitance measurement convenient, reliable, and accurate.

To measure a capacitor simply connect its leads across the counter's input terminals on the front panel. Polarized capacitors such as electrolytics and tantalums must be connected with positive lead to the "+" terminal and negative lead to the "−" terminal. Simply depress the appropriate range switch and the counter comes alive displaying the capacitance count with up to four digits of resolution. Open capacitors cause the counter to read zeros while a shorted device causes a very large reading that may not stabilize. Leaky capacitors tend to read much higher than their labeled value and will indicate different values from range to range.

Of course it's no trick to sort through your junk box capacitors using the capacitance meter just as you would use an ohmmeter to check resistors. Bargain capacitor assortments can be checked for a real savings because hard to decipher military codes, color bands, or no markings at all present no problem with this meter. You can perform quality-control checks on the capacitors you are using in your construction projects. Air variables and ceramic trimmers are frequently unmarked and can be checked for minimum and maximum values or even calibrated in terms of angle of rotation.

Almost all components have a certain amount of capacitance that can affect circuit performance. Wire bundles, coax cable, and twisted pairs all can be easily checked if suspected of causing problems. Two different samples of coax can be compared for minimum capacitance per foot. Other components that can be checked for capacitance include rectifiers, transistors, LED's and other devices.

The capacitance meter's accuracy and resolution are important factors when selecting critical capacitor values. Precision RC networks and oscillators are easily constructed with precisely known capacitor values. A capacitor's temperature stability is of critical importance in many circuits and can be checked by heating or cooling the component and measuring its change in capacitance.

In some instances it is not convenient to measure capacitance at the meter's front panel terminals. A probe can be used for remote capacitance measurements. It will of course add its own capacitance to the measurement. The probe's capacitance can be subtracted from readings or the front panel zero adjustment can be reset. By using the capacitance meter probe, the distributed capacitance

SPECIFICATIONS

Capacitance Ranges

R1/pF	0000—9999 pF
R2/μF	.0000—.9999 μF
R3/μF	00.00—99.99 μF
R4/μF	0000.—9999. μF

Accuracy (Typical factory calibration at T_a+70°-79°F.)

R1/pF, R2/μF	± 1% of reading, ± 1 count
R3/μF	± 1.5% of reading ± 1 count
R4/μF	± 2% of reading ± 1 count

Timebase

Ref. oscillator frequency	3.579 MHz
Ref. oscillator accuracy	± 0.05%

Power Requirements

Input voltage	105-125VAC 60Hz
Input power	3.5 watts

Environmental

Operating temperature range	+5° to +45° Celsius
Storage temperature	−10° to +65° Celsius

Physical Dimensions

Overall dimensions	3"H × 7½"W × 6½"D
Approx. weight	2½ lb

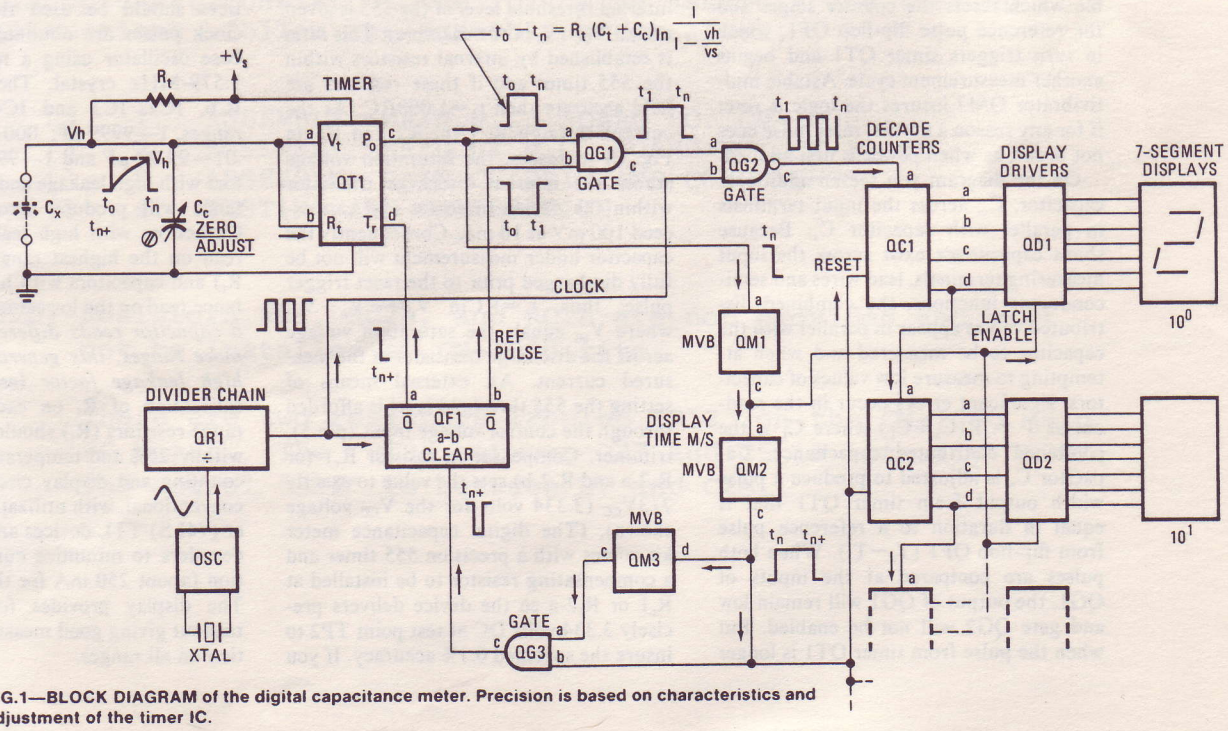

FIG.1—BLOCK DIAGRAM of the digital capacitance meter. Precision is based on characteristics and adjustment of the timer IC.

associated with materials, components, and assemblies (PC board runs, switches, terminals, etc.) can be measured.

Circuit description

The capacitance measuring circuit is shown in simplified block form in Fig. 1. The capacitor to be measured, C_x, is connected across the input terminals and appears in series with resistor R_t and voltage V_s. (Disregard capacitor C_c for the moment.) Upon application of a trigger pulse to input "d" of timer QT1, input "b" of QT1, which was previously held internally at ground potential, is set to its high state allowing voltage V_s to charge the capacitor C_t through resistor R_t. The charge voltage, V_h, appearing at input "a" of QT1 reaches a level—after a period of time—that follows the relationship, $V_h = V_s\ (1 - e^{-t/RC})$ where V_s equals the supply voltage and $e^{-t/RC}$ is an exponential function with R and C expressed in megohms and microfarads and "t" in seconds. If R is 1 megohm and C is 1 μF the V_h after 1 second, "t" becomes: $V_h = V_s\ (1 - 0.368) = 0.632V_s$. If the monostable circuit QT1 has an input threshold level V_r at "a" that will activate a reset condition at exactly $0.632V_s$, then the output will be a pulse whose duration is equal to T = RC.

The pulse output of timer QT1 enables gate QG2 and allows clock pulses from frequency divider QR1 to flow through to the counter stages QC1 and QC2. The BCD input to display drivers QD1 and QD2 from the counter stages is decoded to provide segment data to the display when enabled by a pulse from QM1, a one-shot multivibrator that is triggered when the pulse output of QT1 goes low at the end of the timing period, t_n. Multivibrator QM1 also serves to trigger multivibrator QM2, the display time monostable which resets the counter stages and the reference pulse flip-flop QF1, which in turn triggers timer QT1 and begins another measurement cycle. Astable multivibrator QM3 insures the logic is reset if for any reason a normal reset pulse does not occur, as when power is first applied.

On the diagram you see an additional capacitor, C_c, across the input terminals in parallel with capacitor C_x. Because shunt capacitance exist across the input measuring terminals, lead wires and semiconductor junctions, the combined distributed values appear in parallel with the capacitor to be measured and when attempting to measure low values of capacitors, significant errors occur in the readout as $T = R(C_x + C_L)$ where C_L is the combined distributed capacitance. Capacitor C_x is adjusted to produce a pulse width output from timer QT1 that is equal in duration to a reference pulse from flip-flop QF1 ($T_o - T_1$). When both pulses are compared at the inputs of QG1, the output of QG1 will remain low and gate QG2 will not be enabled. But when the pulse from timer QT1 is longer

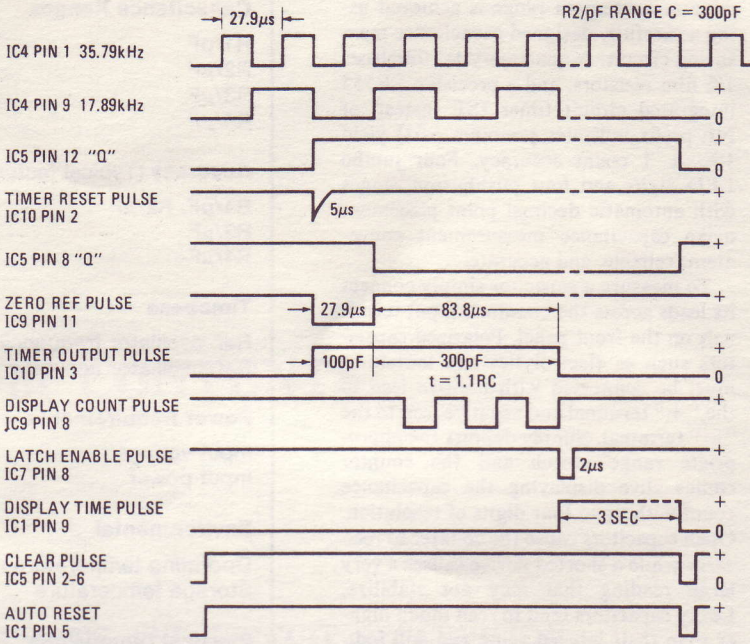

TIMING CHART for the model CM-1000 digital capacitance meter. Helpful in troubleshooting and in understanding circuit operation.

in duration, the output of gate QG1 goes high and enables gate QG2. Consequently, clock pulses are fed into the counter stages. The period $T_0 - T_1$ represents the "zero" compensation adjust interval with the time $T_1 - T_n$ representing the time period due to the capacitance under measurement. The total period is approximately equal to $R(C_x + C_c + C_L)$.

Practical circuit

The actual digital capacitance meter circuit as shown in Fig. 2 operates in the manner previously described. A 555 timer (premium version) is used as the pulse-width generator. The timing chart helps understand circuit operation. The internal threshold level of the 555 is given as 2/3 V_{CC} (V_s in the example). This ratio is established by internal resistors within the 555 timer and if these resistors are held accurate then $t_h = 1.098RC$. As the current through R_t (R6, R7 and R8 in Fig. 2) increases, the saturation voltage across the internal discharge transistor within the device increases and can exceed 100 mV at 10 mA. Consequently the capacitor under measurement will not be fully discharged prior to the reset trigger pulse; thus, $t_h = RC\ln\ V_s/1 - V_A - V_{sat}$ where V_{sat} equals the saturation voltage across the discharge transistor at the measured current. An external means of setting the 555 threshold level is afforded through the control voltage input (pin 5), trimmer. Compensation resistor R_c1 (or R_c2-a and R_c2-b) sets the value to exactly 2/3V_{CC} (3.334 volts for the V_{CC} voltage shown). (The digital capacitance meter kit comes with a precision 555 timer and a compensating resistor to be installed at R_c1 or R_c2-a so the device delivers precisely 3.334 volts DC at test point TP2 to insure the specified 0.1% accuracy. If you obtain your own 555 timer, you'll have to experiment with resistive compensating networks to get the desired voltage at TP2.) Capacitor C_3 at pin 5 must have low leakage as it also shunts the internal resistor network. A leakage current up to 100 nA can exist at pin 7 during the output high state but with the R_t values shown this does not contribute to significant errors. Finally, there exists a propagation delay between the trigger pulse and output risetime of the 555 which must be considered on the low ranges. It should also be mentioned that noise and AC line components appearing at the input terminals can introduce serious errors; good grounding and shielding practices should be used throughout. The clock pulses are obtained from a timebase oscillator using a readily available 3.579-MHz crystal. The divider chain IC6, IC2, IC3 and IC4 provide four ranges, 1—9999 pF, .0001—to .9999 μF, .01—99.99 μF and 1—9999 μF. Capacitors with high leakage and/or series resistance will produce errors in readout. Capacitors with high leakage should be read on the highest range possible (low R_t) and capacitors with high series resistance read on the lowest range possible. *If a capacitor reads differently on two or more ranges, this generally indicates a high leakage factor* (assuming proper calibration of R_t on each range). The range resistors (R_t) should be accurate to within .25% and temperature stable. The counting and display circuits shown are conventional, with utilization of low-power (74LS) TTL devices and some CMOS decoders to minimize current consumption (about 250 mA for the unit shown). The display provides four decades of readout giving good measurement resolution on all ranges.

TESTING AND CALIBRATION

PART IV

Pre-Electrical Test

Do not apply power to the CM-1000 unit until completion of the pre-electrical checks as follows:

() With the power on-off switch in the "off" position (switch pushed in), measure across the two terminal of the A.C. line plug with an ohmeter on the highest range, the reading should be infinity ( ).

() With the power on-off switch in the out position, again measure across the line cord plug terminals with an ohmeter on the lowest range, the reading should be approximately .2 ohms.

() With the ohmeter, measure the resistance between the front panel "black" terminal post and the TP1 terminal (5V terminal). The ohmeter should read between 800-1500 ohms.

() Make a final visual check to insure that all integrated circuit modules are properly oriented in the I.C. socket with respect to the #1 I.C. pin facing toward the end that has semi-circular indentation on the outline around the socket. Double check to insure each I.C. is in the proper socket.

CALIBRATION

() If all pre-electrical checks are satisfactory, apply A.C. power to the instrument. The readout should illuminate within 5 seconds, if not, refer to the troubleshooting section.

() If a volt ohmeter is available, measure the voltage between TP1 on the main P.C. board and the front panel black terminal, adjust the potentiometer located near the voltage regulator UR1 for a volt-meter reading of 5.0 VDC. If no voltage exist or the voltage reads below4.0VDC. Turn off power and refer to the trouble-shooting section.

() With the R1 pf switch "in" (0000-9999pf range), use a small blade screwdriver or tuning tool to turn the zero adjust capacitor until a reading of 0001 is obtained on the readout, then slowly adjust further to the point where the "1" digit switches to "0" Do not adjust any further beyond this point.

TESTING AND CALIBRATION (Cont'd)

CALIBRATION (Cont'd)

() Your Opto-kit contains a "calibrated capacitor" (item 76) that has been calibrated to the value indicated on the plastic container. Attach the capacitor leads to the two front panel terminals. With the range switch on R3/uf, adjust potentiometer R5 to produce a reading equal to the capacitance value given.

() Using a capacitor with a known value within the range of 10-22 ufd (capacitor should have extremely low leakage), and with the range switch on R4/uf, adjust potentiometer R8 to produce a reading equal to the value given.

() This completes calibration of the CM-1000 unit.

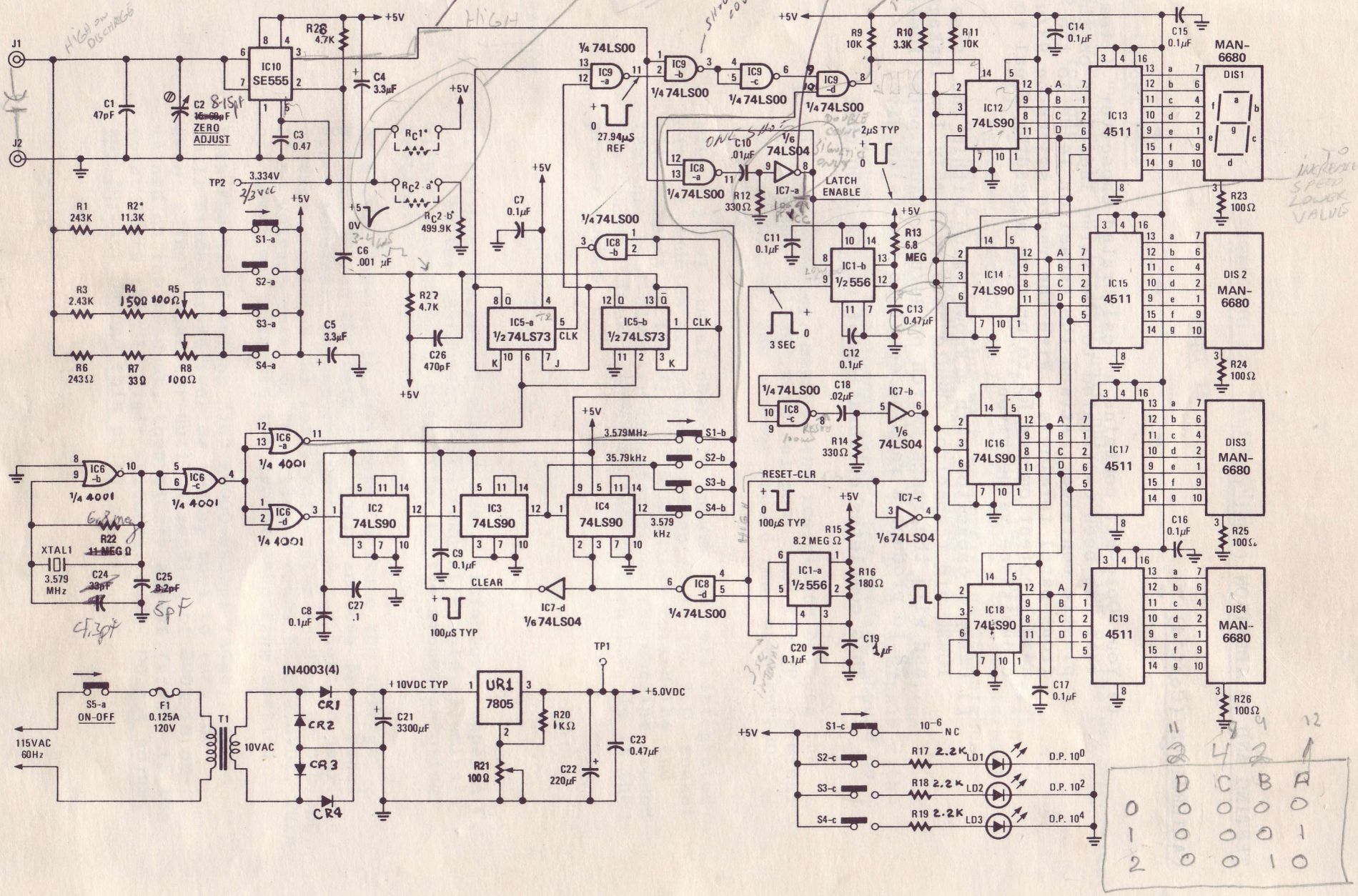
J1
J2
C1 47pF
C2 15-60pF
ZERO ADJUST
IC10 SE555
R28 4.7K
C4 3.3µF
C3 0.47
+5V
TP2 3.334V
R1 243K
R2* 11.3K
R3 2.43K
R4 1500Ω
R5 100Ω
R6 243Ω
R7 33Ω
R8 100Ω
S1-a
S2-a
S3-a
S4-a
C5 3.3µF
C6 .001 µF
R27 4.7K
C26 470pF
RC1*
RC2-a*
RC2-b*
499.9K
C7 0.1µF
IC5-a 1/2 74LS73
IC5-b 1/2 74LS73
CLK
1/4 74LS00
IC9-a
IC9-b
IC9-c
IC9-d
27.94µS REF
IC8-a
IC8-b
IC8-c
IC8-d
C10 .01µF
R12 330Ω
C11 0.1µF
1/6 74LS04
IC7-a
LATCH ENABLE
2µS TYP
R13 6.8 MEG
IC1-b 1/2 556
C12 0.1µF
C13 0.47µF
3 SEC
C18 .02µF
R14 330Ω
IC7-b
IC7-c
RESET-CLR
100µS TYP
R15 8.2 MEG Ω
IC1-a 1/2 556
R16 180Ω
C19 1µF
C20 0.1µF
IC7-d
CLEAR
100µS TYP
IC6-a 1/4 4001
IC6-b 1/4 4001
IC6-c 1/4 4001
IC6-d 1/4 4001
XTAL1 3.579 MHz
R22 11 MEG Ω
C24 33pF
C25 8.2pF
C8 0.1µF
C27 .1
IC2 74LS90
IC3 74LS90
IC4 74LS90
C9 0.1µF
3.579MHz
35.79kHz
3.579 kHz
S1-b
S2-b
S3-b
S4-b
R9 10K
R10 3.3K
R11 10K
C14 0.1µF
C15 0.1µF
C16 0.1µF
C17 0.1µF
IC12 74LS90
IC14 74LS90
IC16 74LS90
IC18 74LS90
IC13 4511
IC15 4511
IC17 4511
IC19 4511
DIS1 MAN-6680
DIS 2 MAN-6680
DIS3 MAN-6680
DIS4 MAN-6680
R23 100Ω
R24 100Ω
R25 100Ω
R26 100Ω
S5-a ON-OFF
F1 0.125A 120V
115VAC 60Hz
T1
10VAC
IN4003(4)
CR1
CR2
CR3
CR4
+10VDC TYP
C21 3300µF
UR1 7805
R20 1KΩ
R21 100Ω
C22 220µF
C23 0.47µF
TP1
+5.0VDC
S1-c
S2-c
S3-c
S4-c
NC
R17 2.2K
R18 2.2K
R19 2.2K
LD1
LD2
LD3
D.P. 10^0
D.P. 10^2
D.P. 10^4
D C B A
0 0 0 0 0
1 0 0 0 1
2 0 0 1 0

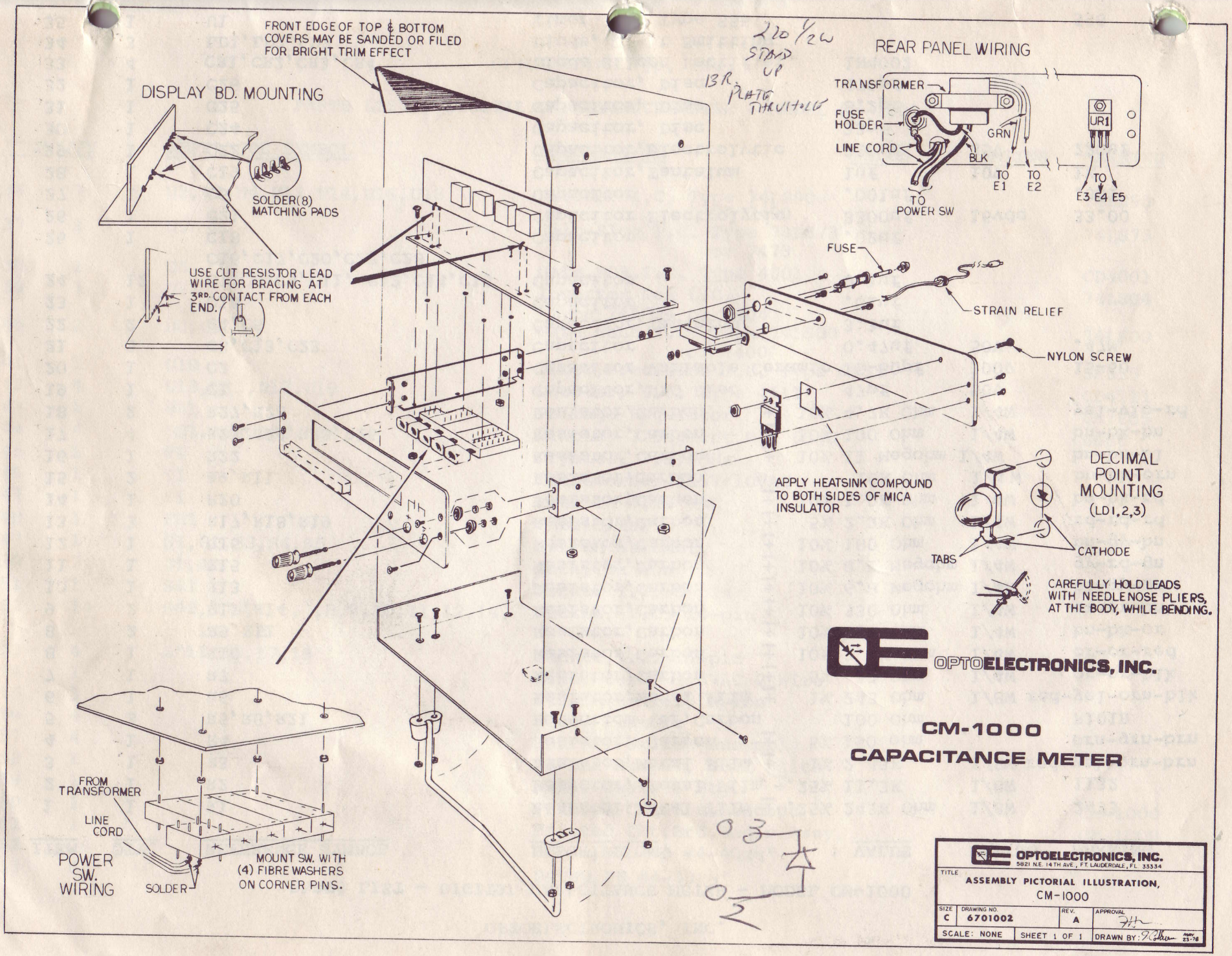
FRONT EDGE OF TOP & BOTTOM COVERS MAY BE SANDED OR FILED FOR BRIGHT TRIM EFFECT
220 1/2W STAND UP
13R. PLATE THRU HOLE
REAR PANEL WIRING
TRANSFORMER
FUSE HOLDER
LINE CORD
GRN
BLK
TO E1
TO E2
TO POWER SW
UR1
TO E3 E4 E5
DISPLAY BD. MOUNTING
SOLDER(8) MATCHING PADS
USE CUT RESISTOR LEAD WIRE FOR BRACING AT 3RD. CONTACT FROM EACH END.
FUSE
STRAIN RELIEF
NYLON SCREW
APPLY HEATSINK COMPOUND TO BOTH SIDES OF MICA INSULATOR
DECIMAL POINT MOUNTING (LD1,2,3)
TABS
CATHODE
CAREFULLY HOLD LEADS WITH NEEDLENOSE PLIERS, AT THE BODY, WHILE BENDING.
OPTOELECTRONICS, INC.
CM-1000
CAPACITANCE METER
FROM TRANSFORMER
LINE CORD
POWER SW. WIRING
SOLDER
MOUNT SW. WITH (4) FIBRE WASHERS ON CORNER PINS.
03
02
OPTOELECTRONICS, INC.
5821 N.E. 14TH AVE., FT. LAUDERDALE, FL. 33334
TITLE
ASSEMBLY PICTORIAL ILLUSTRATION, CM-1000
SIZE C
DRAWING NO. 6701002
REV. A
APPROVAL
SCALE: NONE
SHEET 1 OF 1
DRAWN BY:

OPTOELECTRONICS, INC.

PARTS LIST - DIGITAL CAPACITANCE METER - MODEL CM-1000

ITEM	QTY.	REFERENCE SYMBOL	DESCRIPTION	VALUE	RATING	MARKING
1	1	R1	Resistor,Metal Film ± .25%	243K Ohm	1/8W	2433
2	1	R2	Resistor, Metal Film ±.25%	11.3K	1/8W	1132
3	1	R3	Resistor,Metal Film ± 1%	2.43K	1/8W	red-yel-orn-brn
4	1	R4	Resistor, Carbon ± 5%	150 ohm		brn-grn-brn
5	3	R5,R8,R21	Potentiometer,Carbon	100 Ohm		R101B
6	1	R6	Resistor,Metal Film ± 1%	243 Ohm	1/8W	red-yel-orn-blk
7	1	R7	Resistor,Carbon ± 5%	33 Ohm	1/4W	or-or-blk
8	1	R10	Resistor,Carbon ± 10%	3.3K Ohm	1/4W	or-or-red
8	2	R9,R11	Resistor,Carbon ± 10%	10K Ohm	1/4W	bn-bk-or
9	2	R12,R14	Resistor,Carbon ± 10%	330 Ohm	1/4W	or-or-bn
10	1	R13	Resistor,Carbon ± 10%	6.8 Megohm	1/4W	bl-gy-gn
11	1	R15	Resistor,Carbon ± 10%	8.2 Megohm	1/4W	gy-rd-gn
12	1	R16	Resistor,Carbon ± 10%	180 Ohm	1/4W	bn-gy-bn
13	3	R17,R18,R19	Resistor,Carbon ± 5%	2.2K Ohm	1/4W	rd-rd-rd
14	1	R20	Resistor,Carbon ± 10%	1.0K Ohm	1/4W	bn-bk-rd
15	2	R9,R11	Resistor,Carbon	10K Ohm	1/4 W	bn-bk-orn
16	1	R22	Resistor,Carbon ± 10%	11 Megohm	1/4W	bn-bn-bl
17	4	R23,R24,R25,R26	Resistor,Carbon ± 10%	100 Ohm	1/4W	bn-bk-bn
18	2	R27,R28	Resistor,Carbon ± 10%	4.7K Ohm	1/4W	yel-vio-rd
19	1	C1	Capacitor,NPO Disc	47pf	50V	
20	1	C2	Capacitor Variable Ceramic	15-60pf	100V	15-60
21	3	C3,C13,C23	Capacitor	0.47uf	50V	.47M
22	2	C4,C5	Capacitor,Tantalum	3.3uf		
23	1	C10	Capacitor	.01uf		
24	12	C7,C8,C9,C11, C12,C14,C15 C16,C17,C20,C27,C28	Capacitor	0.1uf		
25	1	C18	Capacitor	.02uf		
26	1	C21	Capacitor Electrolytic	3300uf	16vdc	33.00
27	1	C6	Capacitor	.001uf		.001
28	1	C19	Capacitor,Tantalum	1uf	10V	1K
29	1	C22	Capacitor,Electrolytic	220uf	25V	220uf
30	1	C24	Capacitor, Disc	33pf		
31	1	C25	Capacitor, Disc	8.2pf		
32	1	C26	Capacitor, Disc	470pf		
33	4	CR1,CR2,CR3,CR4	Diode Silcon Rectifier	1N4002		
34	3	LD1,LD2,LD3	Diode, Light Emitting			
35	1	U1	Timer I[illegible] Type 556			556

OPTOELECTRONICS, INC.

PARTS LIST - DIGITAL CAPACITANCE METER - MODEL CM-1000

ITEM	QTY	REFERENCE SYMBOL	DESCRIPTION	VALUE	RATING	MARKING
36	7	U2,U3,U4,U12,U14,U16,U18	Divider I.C. Type 74LS90 or 7490			74LS90
37	1	U5	Flip-Flop I.C. Type 74LS73 or 7473			74LS73
38	1	U6	Gate,NOR,I.C. Type 4001			CD4001
39	1	U7	Inverter Hex L.C. Type 74LS04 or 7404			74LS04
40	2	U8,U9	Gate Nand I.C. Type 74LS00 or 7400			74LS00
41	1	U10	Timer,Precision I.C. Type SE55			SE555
42	4	U13,U15,U17,U19	Decoder, I.C. Type 4511			CD4511
43	1	UR1	Voltage Regulator			UA7805
44	4	DS1,DS2,DS3,DS4	Display 7 Segment MAN 6680			6680
45	1	Y1	Crystal, 3.579MHz			
46	1	T1	Transformer 115V/10VAC			
47	1	F1	Fuse 1A @120 VAC			
48	1	FH1	Fuseholder			
49	1	S1,S2,S3,S4,S5	Switch Assembly			
50	2	J1,J2	Jack, Banana			
51	1	SO1	Socket I.C. 8-pin			
52	14	SO2,3,4,5,6,7,8,9,10,11,12,14, 16, 18	Socket, I.C. 14-pin			
53	4	SO13,15,17,19	Socket,I.C. 16-pin			
54	1		Line, Cord, 115VAC 2 Wire			
55	1		Strain Relief, Nylon			
56	4		Feet, Plastic			
57	4		Spacer, Switch Assembly			
58	1		Rubber Bumper, Self Stick			
59	1		Bale, Chassis Mtg.			
60	1		Printed Ckt.Brd.Readout			CM-1000
61	1		Printed Ckt.Brd.Logic Assy.			CM-1000
62	16		Screw,BVL/HO #4-40x¼"			
63	6		Screw,PH #4-40x½"			

OPTOELECTRONICS, INC.

PARTS LIST - DIGITAL CAPACITANCE METER - MODE CM-1000

ITEM	QTY.	REFERENCE SYMBOL	DESCRIPTION	VALUE	RATING	MARKING
64	6		Screw #6-32 x 3/8			
65	1		Screw, Nylon #6-32 x 3/8"			
66	6		Nut, #4-40			
67	7		Nut, #6-32			
68	1		Mica Insulator w/heat sink compound			
69	1		Cover, Chassis Top			
70	1		Cover, Chassis Bottom			
71	1		Panel, Rear			CM1000R
72	1		Panel, Front			CM1000F
73	2		Bracket, Chassis Support			
74	2		Washer, #6 Lock			
75	2		Turret Terminal Test Points			
76	1		Capacitor, Calibration	.22		SUPPLIED WITH
77	1		Misc. hook-up wire			CALIBRATION TAG